ODF-1U

1U 19-inch Drawout 24-Port Integrated Chassis

Product overview

Standard 1U rackmount drawout chassis constructed of cold-rolled steel plate. Applicable to communications rooms, industrial control, weak-current integration and data access. The chassis carries 24 port modules; the drawout slide rail gives front access for maintenance. Robust structure with favourable heat dissipation.

Overall dimensions (mm)

Height	44.50 mm (1U)	Width	482 mm (19 inch, 430 mm mounting)
Depth	350 mm	Number of ports	24
Mounting	19-inch cabinet rack mounting, drawout slide rails		

Structure and materials

Main body	High-quality cold-rolled steel plate
Load-bearing bracket	High-quality cold-rolled steel
Surface treatment	Electrostatic powder coating
Structural type	Drawout slide-rail type
Heat dissipation	Natural convection cooling
Protection grade	Basic dust-proof and touch-proof

Functional features and fibre capacity

- Standard 1U height, compatible with common cabinets
- Drawout structure for maintenance of internal modules
- 24 standard mounting positions — SC, LC, FC or ST adapters and pigtails
- Ample cable-management space for standardised wiring
- Metal construction: high mechanical strength and anti-interference

SC single-position	max. 24 cores
LC single-position	max. 24 cores
FC / ST single-position	max. 24 cores
SC / LC dual-position	max. 48 cores
LC four-position module	max. 96 cores

Outline dimension drawing

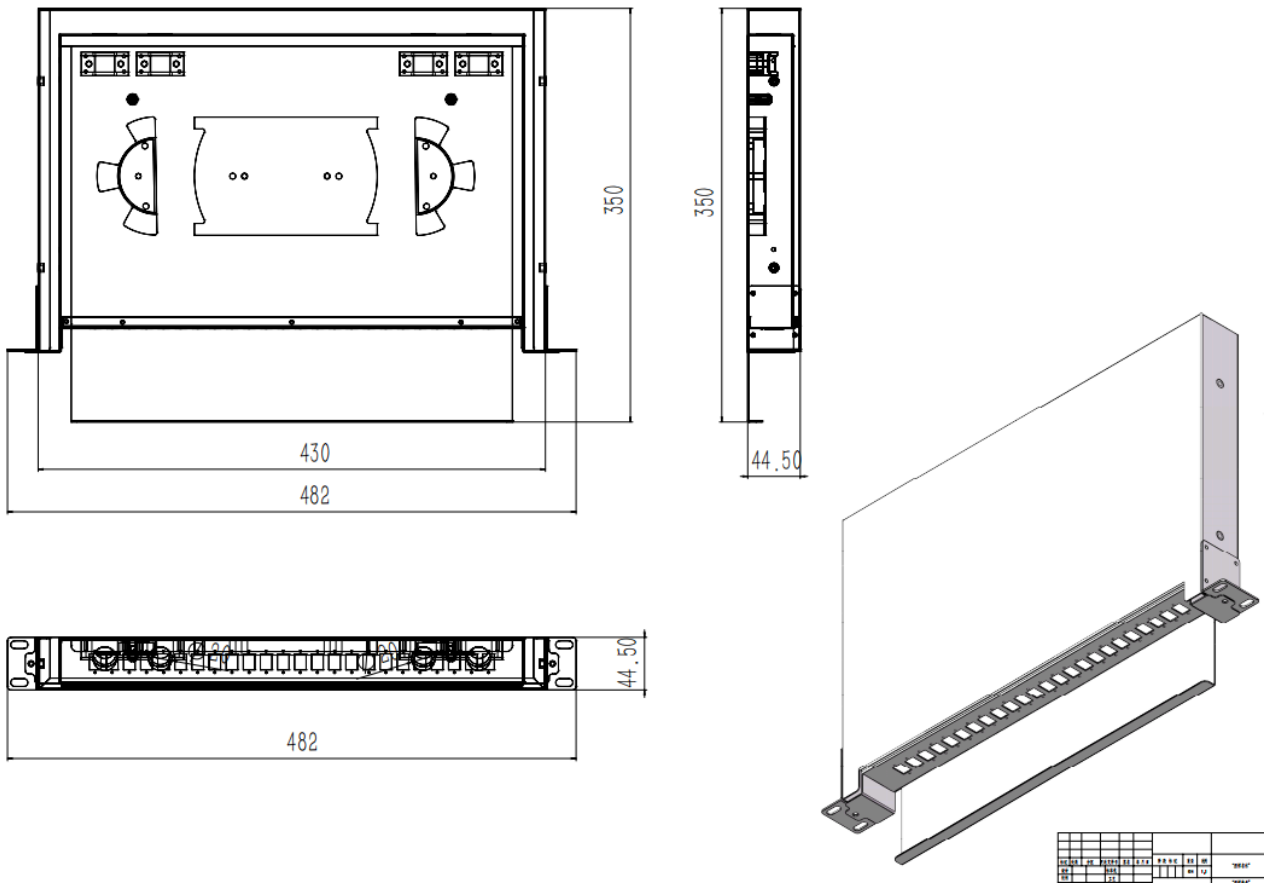

482 × 350 × 44.50 mm body, 430 mm mounting width; slide rail detail on the right.

Scope of application

Rack integration in communication equipment rooms · port convergence for industrial control · port management for weak-current boxes and cabinets · data access units and security-monitoring integration.

Remarks

Dimensions in millimetres. Colour, marking and port types can be customised on request. This specification is compiled from the product drawings.

Quotation, samples and custom builds: zhaozhixing1991@gmail.com · +86 131 5743 6668 · No.13 Guzhong Road, Guyaopu Village, Zhangqi Town, Cixi, Ningbo, Zhejiang, China